USN.No. | | | | | | | | | | |

22MTASDDE211

SECOND SEMESTER M.Tech. UNIVERSITY EXAMINATION, JUNE 2023
STRUCTURAL DYNAMICS AND AEROELATICITY

Time: 3 Hours **Maximum Marks: 100**

Instructions:

i. Answer any **FIVE** full Questions. Question number 1 and 2 are compulsory, Each question carries 20 marks.

ii. Missing data, if any, may be suitably assumed.

1. a Match the following, showing your calculations, for a single degree of freedom system with

m= 1 kg, k =2 N/m, C=0.5 Ns/m, F = F_o Cos ωt where F_o= 2 N and ω=1.2 rad/sec. **10x1**

i.	Natural frequency, ω_n	(a) 1.3919
ii.	Linear frequency, f_n	(b) 2.8284
iii.	Natural time period, T_n	(c) 1.0714
iv.	Critical damping coefficient, C_c	(d) 2.4367
v.	Damping ratio, ζ	(e) 0.2251
vi.	Damped natural frequency, ω_d	(f) 0.8485
vii.	Logarithmic decrement, δ	(g) 1.4142
viii.	Frequency ratio, r	(h) 0.1768
ix.	Magnification factor, M	(i) 4.4429
x.	tan φ, where φ is phase angle	(j)1.1287

b If **F=0**(i.e., no external force) and **C= 0, 0.5, 2.8284 and 5.0,**

i. What is the SDOF system called for the four values of damping? **02**

ii. Show graphical representation of the response of the system for the four cases for an initial displacement of x_0 and initial velocity v_0. **08**

2. a State four methods for defining the equation of equilibrium for undamped vibration of a SDOF system. **04**

b For the system shown in Figure 1,

i. Define the degree of freedom of the system **02**

ii. For the spring **K_2** located at the tip, derive the equivalent spring stiffness **K_2*** at point A. **06**

iii. Set up the equation of motion of the system using the Conservation of Energy method. **06**

iv. Find its natural frequency ω_n. What will be its value if $K_1=K_2=K$ and a=l **02**

JAIN (Deemed-to-be University) Learning Resource Centre Jain Global Campus Ramanagara

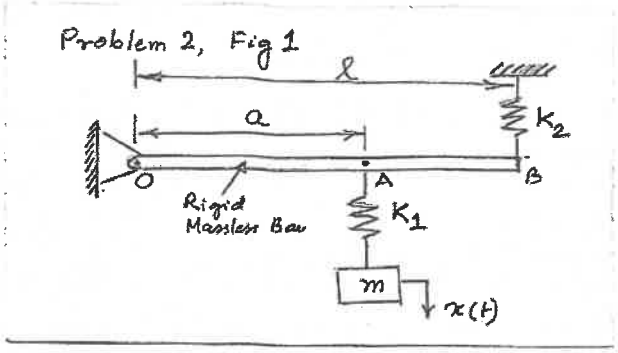

3. **a** **i.** Define logarithmic decrement. What does it represent? **02**

ii. What are the exact and approximate representations of logarithmic decrement? Show their graphical representation. **04**

iii. Explain how the concept of Logarithmic decrement can be used for experimental determination of damping. **04**

b In a SDOF spring -mass system with **m=10 kg**, **K=2000 N/m** and a viscous damper, the amplitude of oscillations decreased to **50 %** of the initial value after **10 cycles**. Calculate: **5x2**

i. Natural frequency ω_n

ii. Damping ratio ζ

iii. Critical damping C_c

iv. Viscous damping constant **C**

v. Damped natural frequency ω_d

OR

4. **a** Define

i. normal mode **02**

ii. node for a 2-DOF system. **01**

iii. Illustrate the same graphically for the 2- DOF system shown in Fig 2. **02**

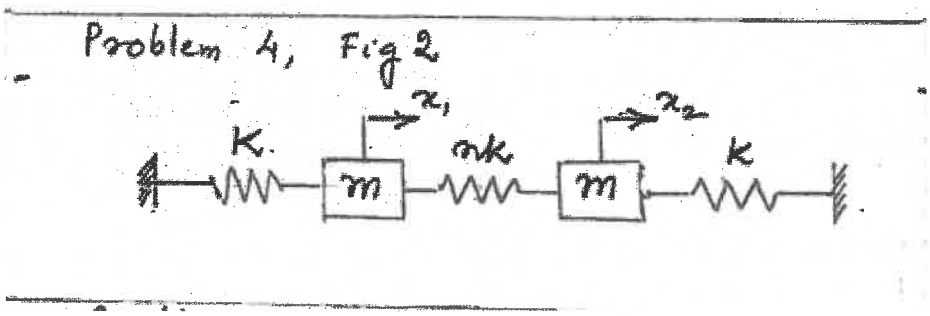

b A **symmetric** typical section airfoil of chord length **c** is in an uniform air flow of speed **U** at an initial angle of attack α_0. The airfoil section is restrained in torsion by a torsional spring of spring constant K_θ at its Elastic Axis (**EA**) location at a distance **e** from its Aerodynamic Centre (**AC**). The wing section's net aerodynamic lift is **L** acting at the AC, and net aerodynamic moment about the AC is M_{AC}. The angle of elastic twist of the airfoil about the EA due to the aerodynamic forces is denoted by θ (positive clockwise).

i. Draw a neat sketch of airfoil showing all the parameters. 02

ii. Derive the expression for the **ratio** of the net equilibrium angle of attack **($\alpha_0 + \theta$)** of the elastic wing to that of the rigid wing **(α_0)** in terms of dynamic pressure **q** and Divergence dynamic pressure **q_D** 08

iii. Show a graphical representation of the variation of **($\alpha_0 + \theta$)/α_0** as **q** varies from **0 to q_D**. 03

iv. What is the ratio of aerodynamic lift **L_e** of the elastic wing to Lift **L_R** of the rigid wing? (note that it is a symmetric airfoil) 02

5. State stepwise the procedure for determination of net unsteady Lift **L** and Pitching Moment **M_y** due to harmonic motion in vertical translation **h(t)** and rotation **α(t)** about an axis **x=ba** for a flat plate 2-D airfoil shown in Figure 3. 20

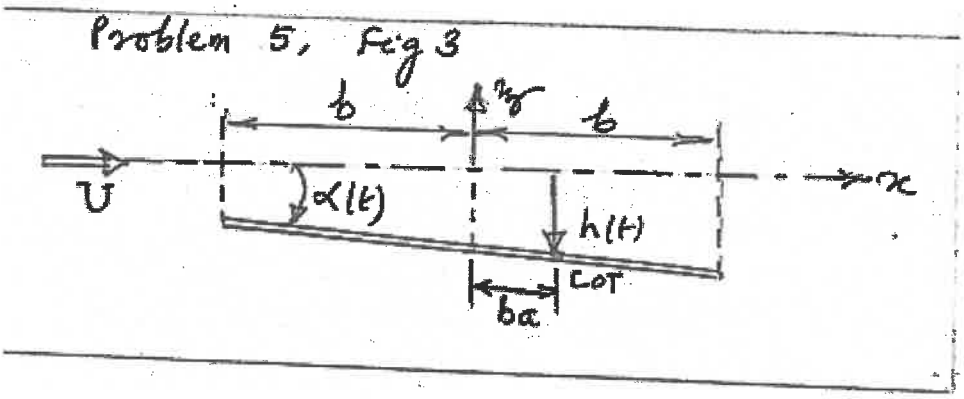

OR

6. a i. **Define Flutter** 02

ii. **What are the design approaches to prevent flutter?** 03

b **A simple SDOF system of an airfoil of chord 2b is hinged at its leading edge (LE) in lowspeed flow of speed U, and elastically restrained in rotation α by a torsional spring of spring constant K_α at the LE. Mass moment of inertia about the LE is I_α. Assume the unsteady aerodynamic moment M_y about the LE for unit change in α to be equal to $\pi\rho b^4\omega^2(m_y)$ where m_y is unsteady aerodynamic moment derivative which a complex quantity represented by [Re(m_y)+iIm(m_y)] where Re(m_y) and Im(m_y) are the real and Imaginary parts which are a functions of reduced frequency k only.**

i. **Draw a neat sketch of the airfoil with all its parameters.** 02

ii. **Derive the conditions for flutter of the airfoil.** 08

iii. **Show variation of Re(m_y) and Im(m_y) with 'k' and mark the flutter condition on the plot and explain its physical significance.** 05

7. **Write Short Notes on any four:** **4x5**

- **i.** **Collar's aeroelastic triangle**
- **ii.** **Buffeting**
- **iii.** **Structural Damping**
- **iv.** **Beats phenomenon**
- **v.** **Quality factor and band width**
- **vi.** **Effect of wing sweep on divergence, flutter and control reversal speeds**

OR

8. **a** Describe the significance of Theodorsen's function **C(k)** **08**

b The equations of motion at flutter for a 2-D airfoil are given by:

$$A\,(h_o/b) + B\,(\alpha_o)=0 \text{ ----- -------(1)}$$

$$D\,(h_o/b) + E\,(\alpha_o)=0 \text{ ----------(2)}$$

where h_o and α_o are amplitudes of harmonic motion at flutter, and α_o is a complex number to allow for phase difference between **h** and α.

A, B, D, E are functions of nondimensional airfoil design parameters mass ratio μ, CG offset x_α, EA offset **a**, radius of gyration r_α and uncoupled bending & torsion frequency ratio $(\omega_h/\omega_\alpha)^2$. **A** and **E** are also functions of the parameter $(1+ig)(\omega/\omega_\alpha)^2$ where **g** is structural damping parameter.

- **i.** Define the condition for determining flutter from Equations (1) and (2). **02**
- **ii.** Describe the procedure for solving the flutter determinant and determining the flutter speed U_F and flutter frequency ω_F. **08**
- **iii.** What is a **U-g** plot used in aircraft design office for flutter speed calculation? **02**